12.4 SURFACE AREA of PYRAMIDS

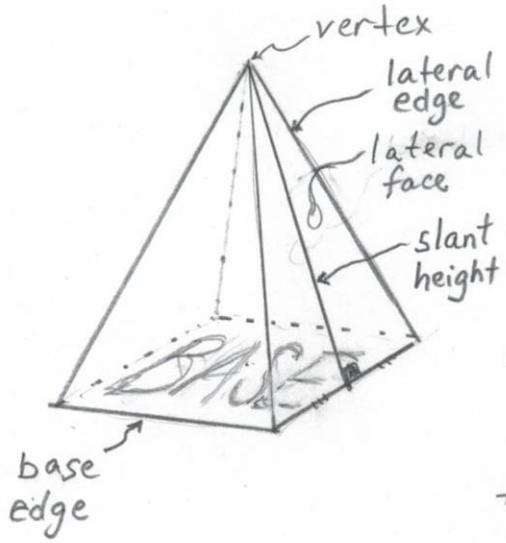

A <u>pyramid</u> is a solid with a polygonal base and lateral sides meeting at a vertex.

The <u>lateral edge</u> joins the vertex of the pyramid to a vertex of the base polygon.

A <u>lateral face</u> is a side of the pyramid.

The <u>slant height</u> is the length of the segment joining the vertex of the pyramid to a midpoint of a base edge.

To find the surface area of a pyramid it is helpful to consider the net... a flat representation of the exploded solid.

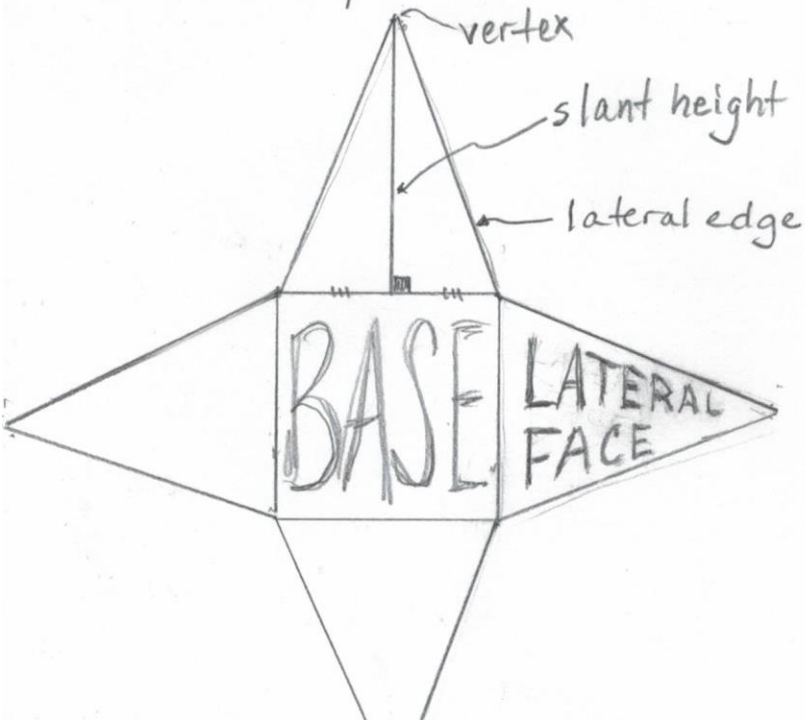

The surface area is determined by adding the area of lateral faces (triangles) to base area (a square here).

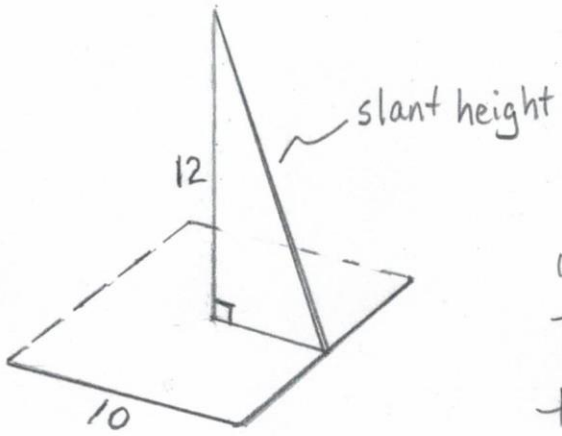

It can be helpful to disect a pyramid. In this case we form a right triangle with legs of 5 and 12. This will enable us to find the slant height to be 13.

A little more complex...

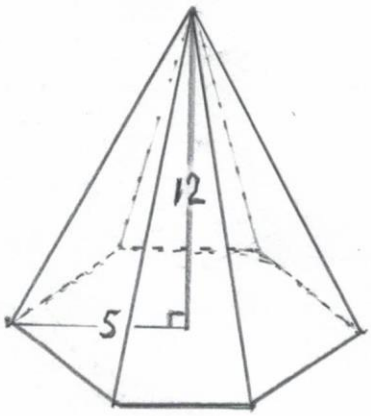

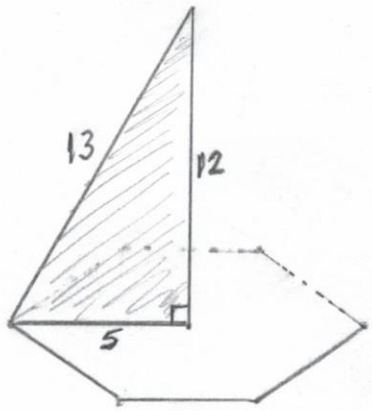

You can draw in a lateral edge and apply the Pythag. Th'm to find its length.

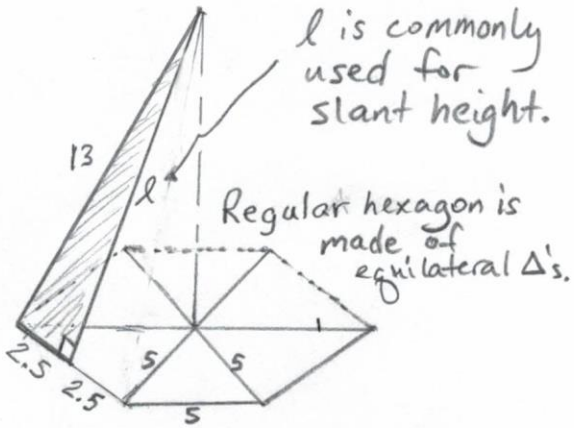

Then use that length to find slant height.

$$(2.5)^2 + (\ell)^2 = (13)^2$$